D748G

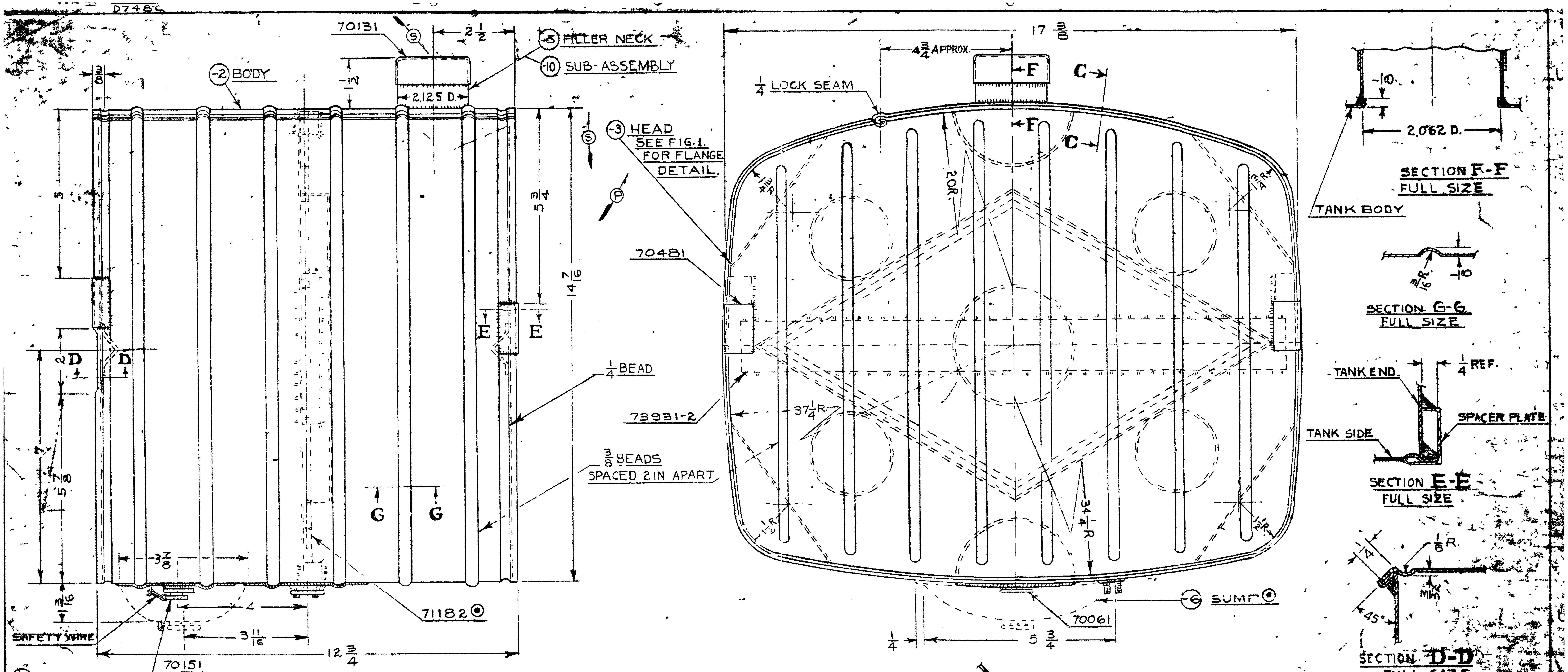
70131
S
2 1/2
-5 FILLER NECK
-10 SUB-ASSEMBLY
3/8
-2 BODY
1/2
2.125 D.
S
-3 HEAD
SEE FIG. 1. FOR FLANGE DETAIL.
P
5
5 3/4
14 7/16
E E
2 D D
1/4 BEAD
7
5 7/8
3/8 BEADS SPACED 2 IN APART
G G
3 7/8
3/16
4
3 11/16
12 3/4
SAFETY WIRE
70151
71182
17 3/8
4 3/4 APPROX.
F
F
C
C
1/4 LOCK SEAM
20 R.
1 1/4 R.
3/4 R.
70481
73931-2
37 1/4 R.
34 1/4 R.
1/2 R.
1/2 R.
-6 SUMP
70061
1/4
5 3/4
-10
2.062 D.
SECTION F-F
FULL SIZE
TANK BODY
3/16 R.
1/8
SECTION G-G
FULL SIZE
TANK END
1/4 REF.
TANK SIDE
SPACER PLATE
SECTION E-E
FULL SIZE
1/4
1/8 R.
3/32
45°
SECTION D-D
FULL SIZE

SEP 11 1968

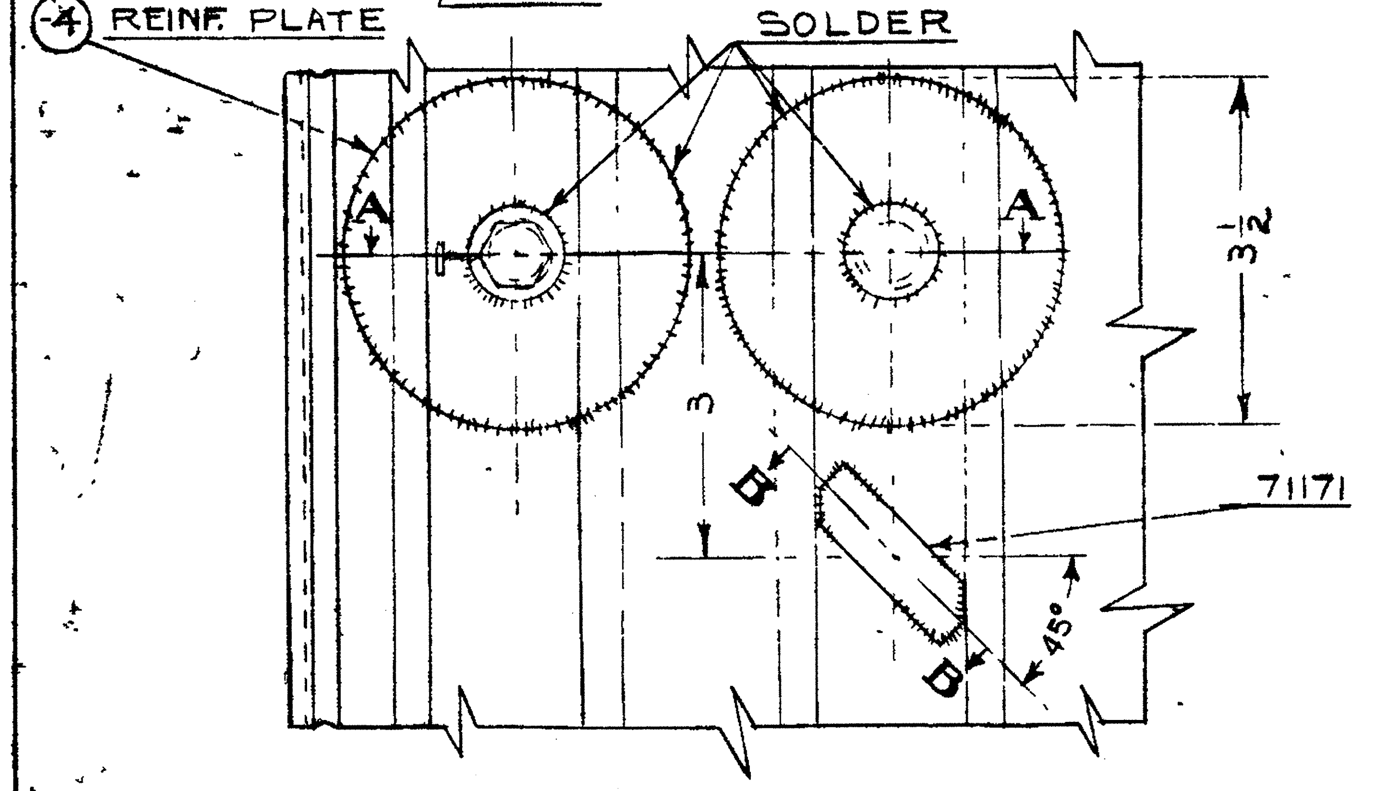
-4 REINF. PLATE
SOLDER
A
A
3 1/2
3
B
B
71171
45°

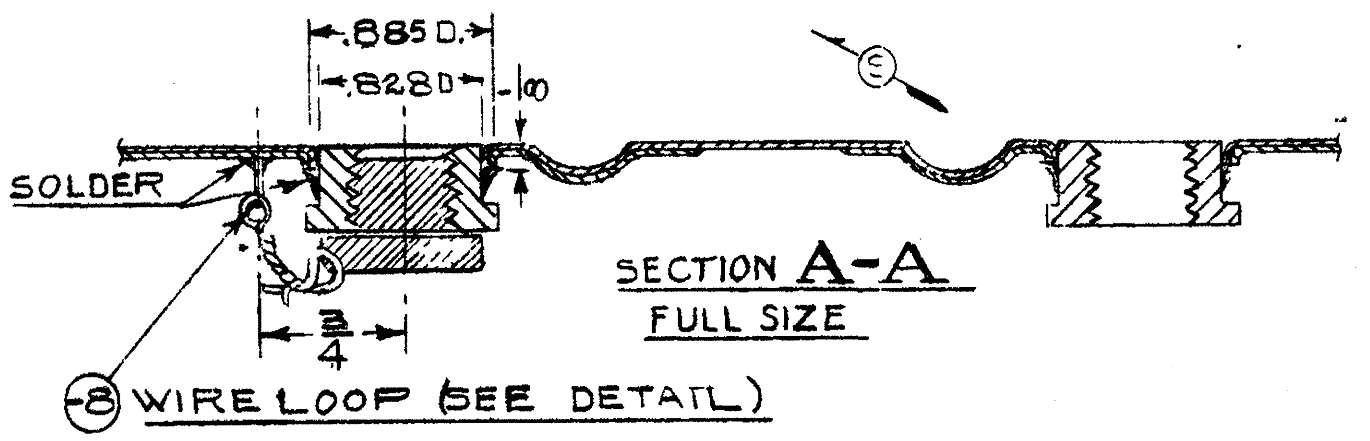
.885 D.
.828 D.
1/8
SOLDER
3/4
-8 WIRE LOOP (SEE DETAIL)
SECTION A-A
FULL SIZE

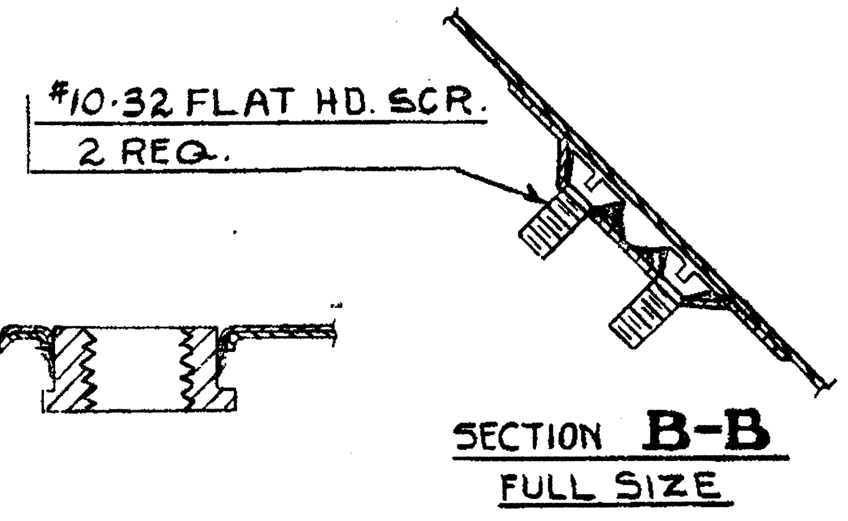
#10-32 FLAT HD. SCR.
2 REQ.
SECTION B-B
FULL SIZE

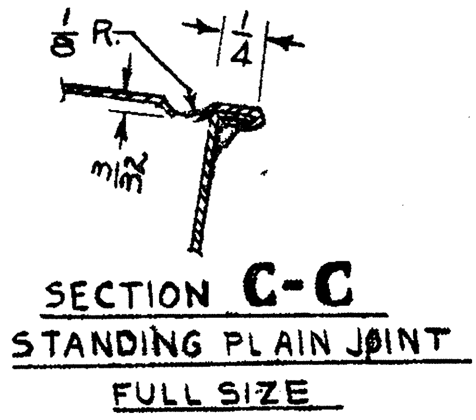
1/8 R.
1/4
3/32
SECTION C-C
STANDING PLAIN JOINT
FULL SIZE

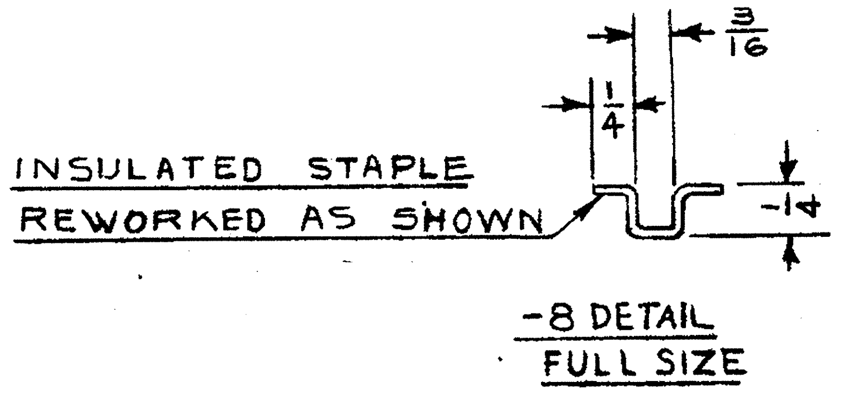
3/16
1/4
1/4
INSULATED STAPLE
REWORKED AS SHOWN
-8 DETAIL
FULL SIZE

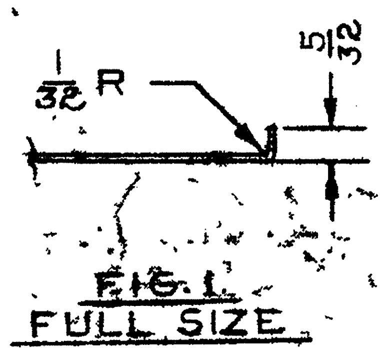
1/32 R
5/32
FIG. 1.
FULL SIZE

NOTES:

1. ALL SEAMS & FITTINGS SOFT SOLDERED.
2. ~~TREAT INTERIOR OF TANK WITH SLUSHING COMPOUND, AAF SPEC #3595 APPLIED IN ACCORDANCE TO MFGRS. INSTRUCTIONS.~~ Ⓡ
3. ~~PARTS MARKED THUS ∆ USED ON 53173(L4B), 10377(L5C) 77143(L5C), 70281(L4C) & 71552(J5C)~~ Ⓠ
4. PARTS MARKED THUS ◉ USED ON 70723-9 ONLY, ALL OTHER PARTS COMMON TO ALL ASSEMBLIES LISTED. Ⓣ

ASS'Y. NO.	MODEL	PERSHIP	NEXT ASS'Y.	REMARKS
70723	J3, L4A	1	70493	
70723-9	J3	1	70493	USED FOR BRITISH EXPORT ONLY

	PART No.	No. REQ.	SIZE	DESCRIPTION
	-10	-	SUB-ASSEMBLY CONSISTS OF -5 & 7013[illegible]	
		1	.032 x 3	BRASS WIRE
◉	71182	1	BAFFLE	
	#10-32	2	1/2 LONG	FL. HD. MACH. SCREW
	73931-2	2	STIFFENER	
	71171	1	BRACKET	
	70481	4	STRAP SPACER	
	70151	1	DRAIN PLUG	
	70131	1	CAP FLANGE	
	70061	2	FITTING	
	-9	-	SEE TABLE	
∆	-8	1	#3 INSULATED STAPLE [illegible]	
	-7	-	THIS PART OBS. SEE DWG. [illegible]	
◉	-6	1	.018 x 3 7/8 x 5 3/4	TERNEPLATE
	-5	1	.018 x 1 1/2 x 7 3/8	TERNEPLATE
	-4	2	.018 x 3 1/2 x 3 1/2	TERNEPLATE
	-3	2	.018 x 15 x 18	TERNEPLATE
	-2	1	.018 x 13 1/4 x 56 3/8	TERNEPLATE

MATERIAL

LIMITS, SHOP PRACTICES AND FINISH UNLESS OTHERWISE NOTED, TO BE IN ACCORDANCE WITH PIPER SPECIFICATIONS #9 AND #10.

SCALE 6 IN. = 1 FT. & NOTED | TOTAL WT. - LBS.

FINISH

LET.	REVISION	DATE	BY
U	4-.125 HOLES & FIG. 2 REM.	5-16-46	BC
T	J5C MODEL REF ADDED FOR -8	12-17-45	E.L.N.
S	.125 HOLES, FIG. 2 & -10 ADDED	12-17-45	E.L.N.
R	NOTE 2 CANCELED	12-6-45	D.A.W.
Q	J5C MODEL REF CANC. FOR -8	11-8-45	L.T.
P	FIG. 1 & NOTE ADDED	7-19-44	L.P.M.
O	REDRAWN & REVISED	3-7-44	IDB

MODEL	PER SHIP	NEXT ASSEMBLY	SUPERSEDES	SUP. BY
NOTED	NOTED	NOTED		

• TANK ASSY - FUEL

PIPER AIRCRAFT CORP.
LOCK HAVEN, PENNA.

DRAWN	CHECKED	APPROVED
L. BARNARD 3-7-44	C.K. 3-7-44	

70723